MOTORIZATION REAR RAMP ACTUATOR

20 TO 600mm TRAVEL

DATASHEET ISP15A816FPI0001-A

Update : 08/30/2017

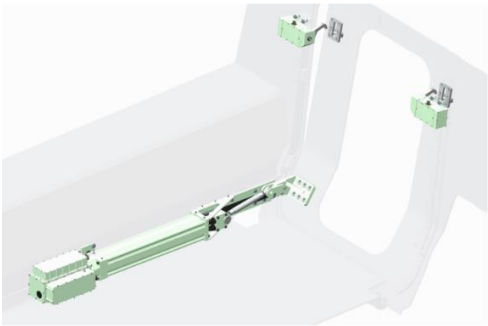

Motorization rear ramp armored vehicle

1 - Application

These two actuators are adapted to irreversible application where heavy/armored doors are required to be opened or closed.

The market targeted is defense

2 - Description

Self-balanced heavy duty actuator

- DC motor
- Self-locking system allowing the reduction of current peaks
- Manual emergency control
- Sensors
- Electromagnetic brake
- Ball screw
- Integrated electronic board
- Electrical connector MIL-D38999
- Protected with paint for harsh environment
- Temperature range -32°C, +50°C
- Certified to MIL-STD-810

Locking armored door actuator

- DC motor
- Closing hook for automatic pressing of the door seal
- Integrated electronic board
- Protected with paint and coating for harsh environment
- Temperature range -32°C, +60°C
- Certified to MIL-STD-810

All our products can be customized to match your exact requirements

This document belongs to ISP SYSTEM, it cannot be used, copied or communicated without a prior written agreement.
The mentioned information, herein, are subject to change. Thanks to consult ISP SYSTEM

3 - Technical Data

CHARACTERISTICS	SPECIFICATIONS	
Travel:	600mm	20mm
Cycle speed/time:	100 mm/s (3s opening)	1s locking
Force:	10 000 N	Opening : 500 daN / Locking : 500 daN
Size:	2435 x 230 x 200 mm	280 x 220 x 85 mm
Weight:	80kg	7kg
Material :	Aluminum	Aluminum, Stainless Steel
Electrical specification:	28 VDC, 100A	24V, < 20A
Electronic:	Integrated board, Servo	Integrated board
Ingress protection:	• IP65 • Protected from total dust ingress • Protected from low pressure water jets from any direction	• IP65-9k • Protected from total dust ingress • Protected from low pressure water jets from any direction

4 - Dimensions (mm) for 20 to 600mm-travel actuator

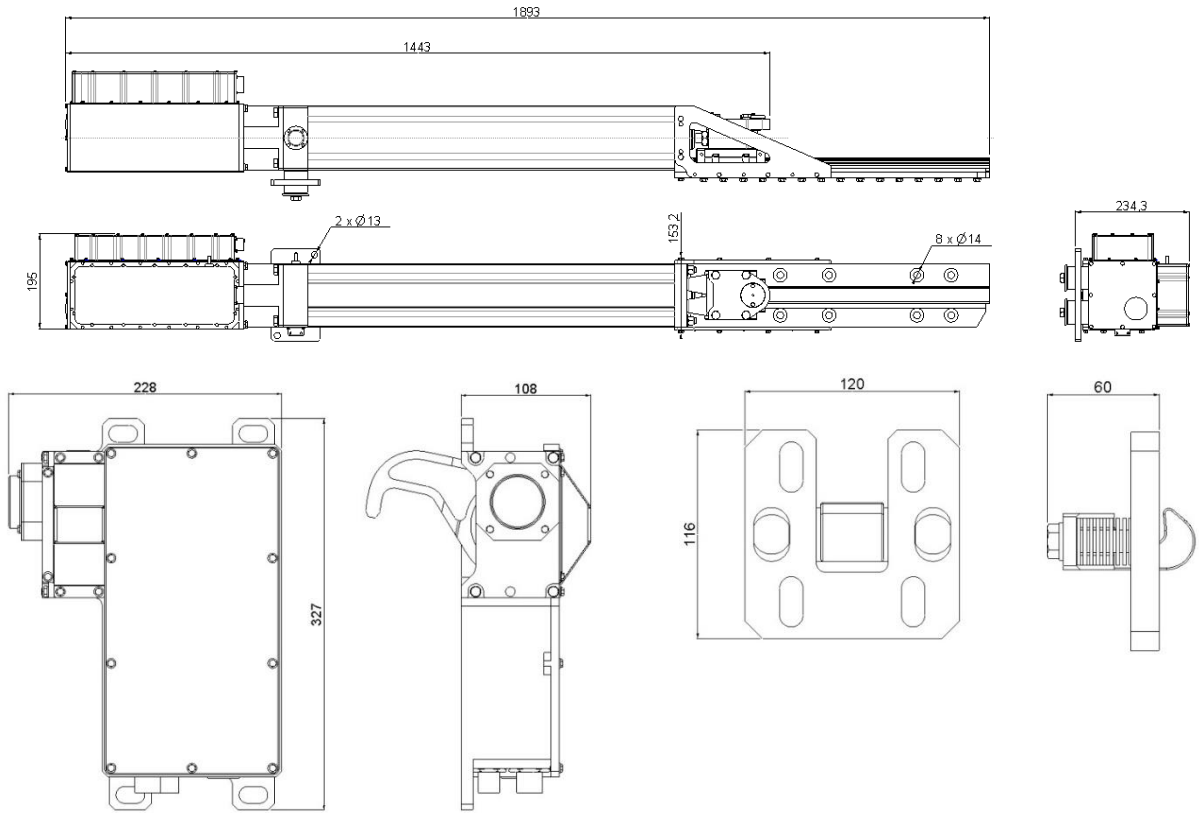

Note: *Other information's or drawings on demand*

ISP SYSTEM
Z.I. de la Herray – B.P. 10047
65501 VIC-EN-BIGORRE - France
+33 (0)5 62 33 44 44
+33 (0)5 62 33 44 45
contact@isp-system.fr
www.isp-system.fr

Capital de 1 000 000 € - SIRET : 410 675 078 00027 – APE : 7112B – TVA : FR 19 410 675 078

This document belongs to ISP SYSTEM, it cannot be used, copied or communicated without a prior written agreement.
The mentioned information, herein, are subject to change. Thanks to consult ISP SYSTEM